PCIe M.2 SSDs

MTE770A & MTE770A-I

Transcend's M.2 SSD MTE770A is built with the BiCS8 218-layer 3D NAND flash, delivering enhanced storage density and an optimized architecture for outstanding performance and stability. Combined with a high-speed PCIe Gen 4 x4 interface, it fully unleashes the potential of next-generation NAND, ensuring fast and reliable data access.

The MTE770A is engineered for demanding industrial environments, featuring a 30μ" gold finger PCB, Corner Bond technology, and anti-sulfur resistors to reinforce critical components and enhance durability. Rigorously tested, it supports an extended temperature range of -20°C to 75°C, maintaining stable operation even under rapid temperature fluctuations.

Compliant with the TCG Opal 2.0 standard, the MTE770A is a self-encrypting drive (SED) equipped with AES-256 hardware-based encryption and LBA-level management, providing advanced data protection for sensitive information. Transcend also offers the wide-temperature MTE770A-I, designed to operate reliably in extreme conditions from -40°C to 85°C. It is ideal for industrial systems requiring consistent performance, durability, and reliability under heavy workloads.

Hardware Features

- Compliant with PCI Express specification 4.0
- Compliant with NVM Express specification 2.0
- PCIe Gen 4 x4 interface
- Endurance: 3K P/E cycles (Program/Erase cycles) guaranteed
- 30μ" PCB gold finger

Firmware Features

- Built-in LDPC ECC (Error Correction Code) functionality
- Dynamic thermal throttling
- Supports S.M.A.R.T. function to conduct health monitoring, analysis, and reporting for storage devices
- Compliant with TCG Opal specifications and IEEE 1667 standards

Ordering Information

256GB	TS256GMTE770A TS256GMTE770A-I
512GB	TS512GMTE770A TS512GMTE770A-I
1TB	TS1TMTE770A TS1TMTE770A-I
2TB	TS2TMTE770A TS2TMTE770A-I

*Supports Microsoft® eDrive standard

Specifications

Appearance	Dimensions	80 mm x 22 mm x 2.23 mm (3.15" x 0.87" x 0.08")
	Weight	9 g (0.32 oz)
	M.2 Type	2280-S2-M (Single-sided)
	Form Factor	M.2 2280
Interface	Bus Interface	NVMe PCIe Gen4 x4
Storage	Capacity	256 GB / 512 GB / 1 TB / 2 TB
	Flash Type	218-layer 3D NAND flash
Operating Environment	Operating Voltage	3.3V±5%
	Operating Temperature	Standard Temp. -20°C (-4°F) ~ 75°C (167°F) Wide Temp. -40°C (-40°F) ~ 85°C (185°F)
	Storage Temperature	-55°C (-67°F) ~ 85°C (185°F)
	Humidity	5% ~ 95%
	Shock	15 G, 11 ms, 3 axis
	Vibration (Operating)	20 G (peak-to-peak), 7 Hz ~ 2000 Hz (frequency)
Power	Power Consumption (Operation)	5.0 watt(s)
	Power Consumption (IDLE)	0.64 watt(s)
Performance	Sequential Read/Write (CrystalDiskMark)	Read: Up to 7,400 MB/s Write: Up to 6,700 MB/s
	4K Random Read/Write (IOmeter)	Read: Up to 1,000,000 IOPS Write: Up to 1,000,000 IOPS
	Mean Time Between Failures (MTBF)	3,000,000 hour(s)
	Terabytes Written (TBW)	Up to 3,400 TBW
Warranty	Certificate	CE / UKCA / FCC / BSMI
	Warranty	Three-year Limited Warranty

Mechanical Dimensions

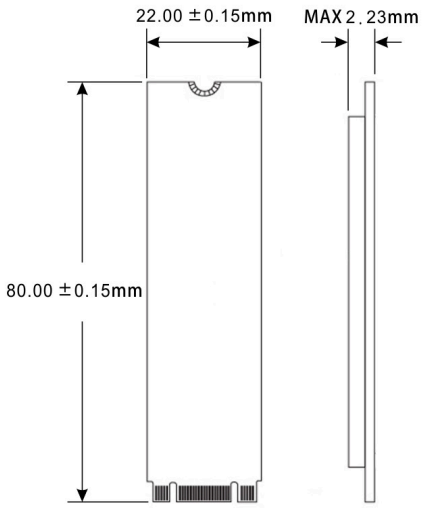

Product specifications are subject to change without notice. Pictures shown may differ from actual products. Total accessible capacity varies depending on operating environment. Due to the complexity and variety of industrial applications, Transcend cannot guarantee 100% compatibility with all platforms and under all scenarios. For special applications and environments, it is strongly suggested that you contact Transcend beforehand for clarification.